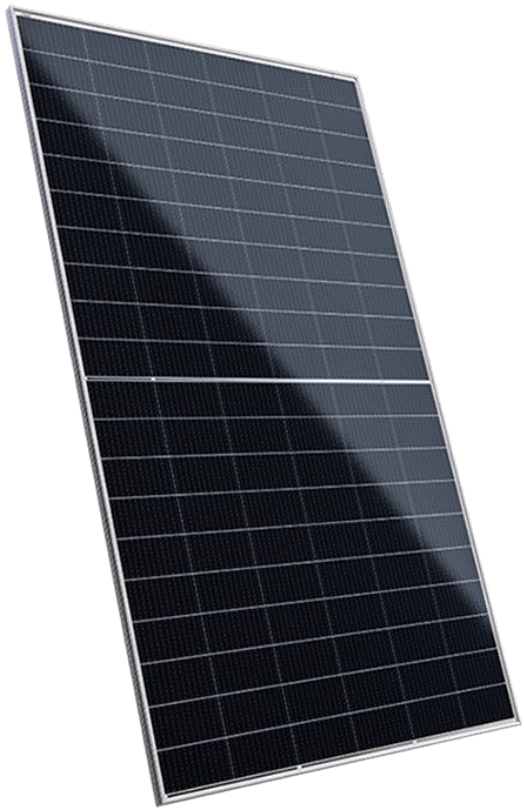

# ASTORIOS

per aspera ad astra

## PHOTOVOLTAIC MODULE

**HIGH EFFICIENCY**
**TOPCON N-TYPE BIFACIAL CELLS**
SILVER FRAME, DOUBLE GLASS

ASTR **120HCND/12** Series **650-660 Wp**

**660 Wp**
MAXIMUM POWER OUTPUT

**23.32 %**
MAXIMUM MODULE EFFICIENCY

### NEGLIGIBLE LID IMPACT
TOPCon cells exhibit an almost zero susceptibility to Light Induced Degradation, ensuring sustained high efficiency over time despite exposure to sunlight

### HIGH EFFICIENCY
N-type cells technology provides the highest efficiency modern multi busbar configuration at affordable cost

### MINIMIZING THE SHADING IMPACT
Better partial-shade tolerance due to separated half panel string wiring

### SAND, AMMONIA AND SALT MIST RESISTANCE
Sand blowing, ammonia and salt mist resistance tests have been passed by international standards to ensure operation in harsh conditions

### HOT SPOTS RISK REDUCTION
Sophisticated electrical design, cells sorting, cutting and soldering technology leads to low hot spot risk and temperature control

### MULTI BUSBAR TECHNOLOGY
Better light absorption and current collection for better power output

### PID RESISTANT
Selected encapsulants, precision in manufacturing quality control makes modules highly PID resistant and snail trails free

### SUPERIOR SAFETY AND RELIABILITY
Tested to avoid microcracks and welding cracks, can withstand high pressure loads, passed multi-step quality control

## PERFORMANCE

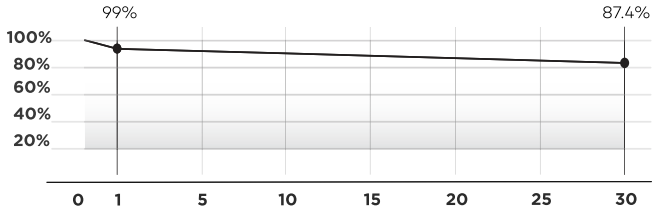


**30 YEARS**
Performance Guarantee

**20 YEARS**
Product Warranty

info@astorios.com
www.astorios.com

# ASTORIOS

per aspera ad astra

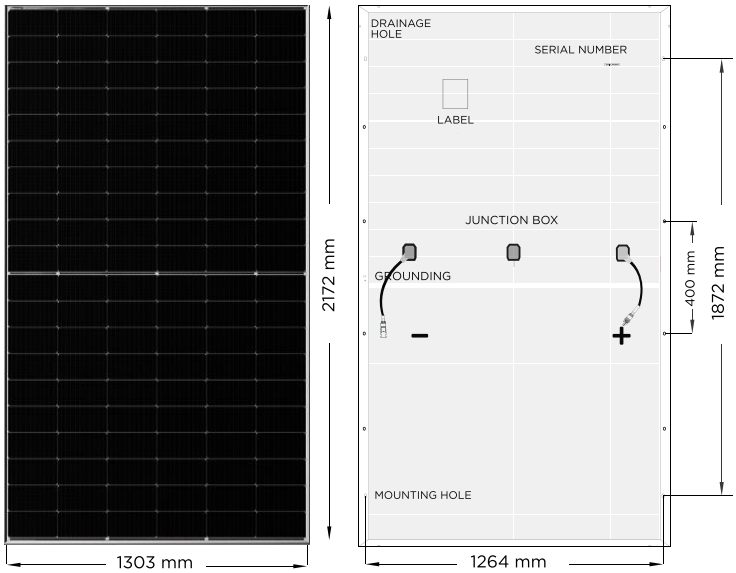


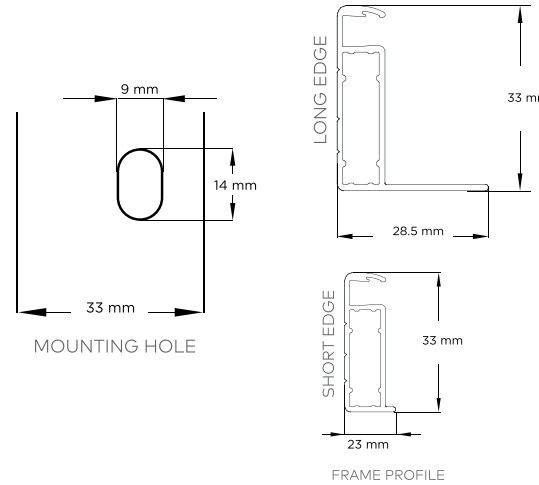


## MATERIAL CHARACTERISTICS

| | |
|---|---|
| Dimensions | 2172 × 1303 × 33 mm |
| Weight | 35.6 kg |
| Number of cells | 120 pcs (6x20) |
| Glass front/rear | 2mm, High transparency, AR coated |
| Cell layout | Bifacial, Half Cut N-Type (105x210 mm) |
| Frame | Silver frame, Anodized aluminum alloy |
| Junction box | IP68 Rated, 3 bypass diodes |
| Connector type | Staubli MC4-Evo 2 / MC4 (Original) |
| Cable | 4 mm², 300 mm |

## TEMPERATURE PARAMETERS

| | |
|---|---|
| Temperature Coefficient of Pmax | -0.30 % / °C |
| Temperature Coefficient of Voc | -0.25 % / °C |
| Temperature Coefficient of Isc | +0.04 % / °C |
| Operating Temperature | - 40°C to + 85°C |
| Normal Operating Cell Temperature (NOCT) | 44±2°C |

## MAXIMUM RATINGS

| | |
|---|---|
| Max. System Voltage | 1500V |
| Max. Series Fuse Rating | 30A |
| Uplift load (wind) | 2400 Pa* |
| Downforce (snow) | 5400 Pa* |
| Hail Resistance | 25mm ice-ball with velocity of 23m/s |

*For more information please refer to Instruction Manual

## PACKAGING INFORMATION

| | |
|---|---|
| One pallet quantity | 33 Pcs / 1193kg / 2305x1130x1330mm |
| 40 ft HC/HQ container | 594 Pcs / 18 Pallets |

| MODULE TYPE 120HCND/12 | 650 Wp | | 655 Wp | | 660 Wp | |
|---|---|---|---|---|---|---|
| **ELECTRICAL CHARACTERISTICS** | **STC** | NMOT | **STC** | NMOT | **STC** | NMOT |
| Maximum power (Pmax/Wp) | **650** | 495 | **655** | 499 | **660** | 503 |
| Open circuit voltage (Voc / V) | **44.46** | 42.11 | **44.66** | 42.26 | **44.86** | 42.39 |
| Short circuit current (Isc / A) | **18.40** | 14.82 | **18.44** | 14.85 | **18.48** | 14.88 |
| Maximum power voltage (Vmp / V) | **37.39** | 35.06 | **37.56** | 35.27 | **37.76** | 35.48 |
| Maximum power current (Imp / A) | **17.40** | 14.12 | **17.44** | 14.15 | **17.48** | 14.18 |
| Module efficiency at STC (ηm / %) | **22.97** | | **23.14** | | **23.32** | |
| Power tolerance (Pmax) | | | **0~+3%** | | | |

**NMOT:** Irradiance 800 W/m2, ambient temperature 20°C, wind speed 1 m/s / **STC:** Irradiance of 1000 W/m2, spectrum AM 1.5, a module temperature of 25°C

| **BIFACIAL OUTPUT: BACKSIDE POWER GAIN** | **10%** | **20%** | **10%** | **20%** | **10%** | **20%** |
|---|---|---|---|---|---|---|
| Pmax (Wp) | 715 | 780 | 720.5 | 786 | 726 | 792 |
| Module efficiency (%) | **25.26** | **27.56** | **25.46** | **27.77** | **25.65** | **27.98** |

## CERTIFICATES

IEC62716 (Ammonia)
IEC60068-2-68 (Sand)
IEC61215 / 61730 / 61701

I-V Curve at Different Temperature

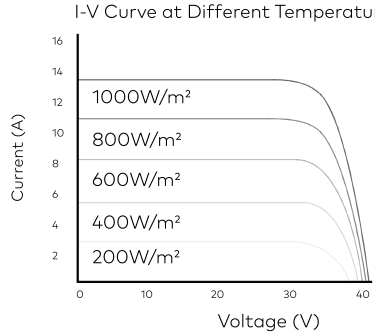


P-V Curve

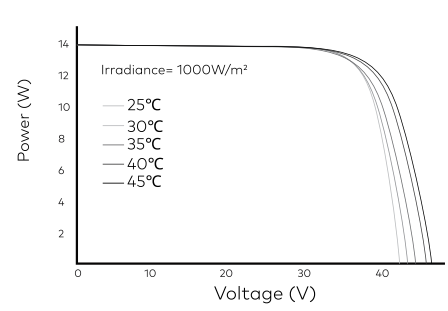


ASTORIOS Holding Inc.
16192 Coastal Highway, Lewes,
Delaware 19958, USA
info@astorios.com

V2610DSEN
ALL RIGHTS RESERVED
DATA IS SUBJECT TO CHANGE WITHOUT NOTICE